PROPRIETARY AND CONFIDENTIAL

THE INFORMATION CONTAINED IN THIS DRAWING IS THE SOLE PROPERTY OF ARDENT CONCEPTS, INC. ANY REPRODUCTION IN PART OR AS A WHOLE WITHOUT THE WRITTEN PERMISSION OF ARDENT CONCEPTS, INC. IS PROHIBITED.

REVISIONS

REV.	DESCRIPTION	DATE	APPROVED
B	ECN07-0227,RELEASED	11/9/07	BMS

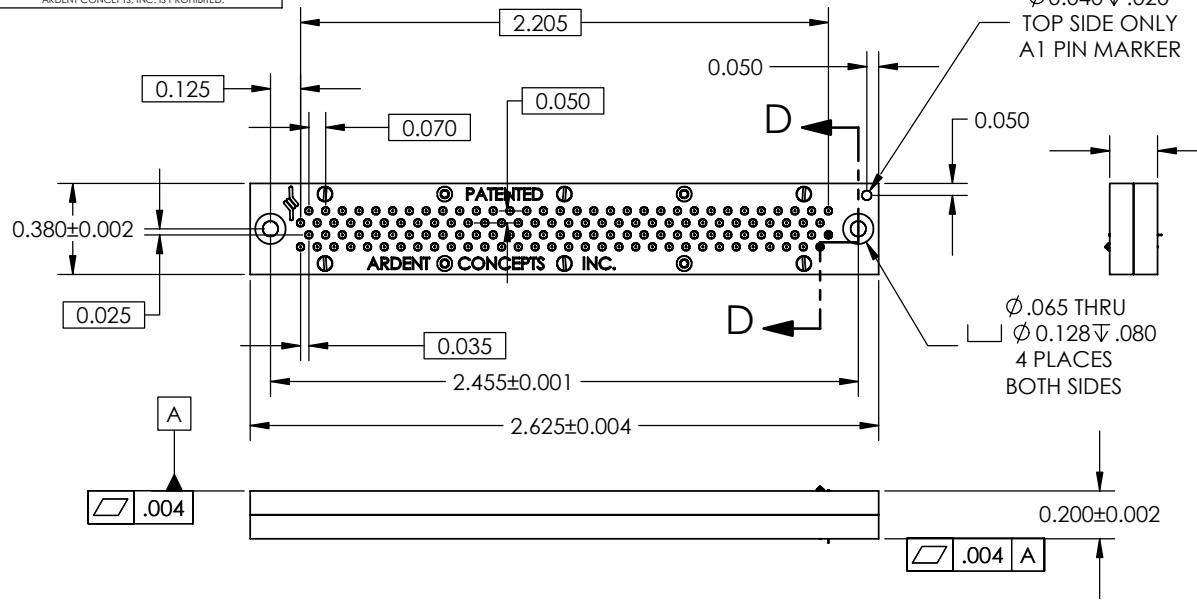

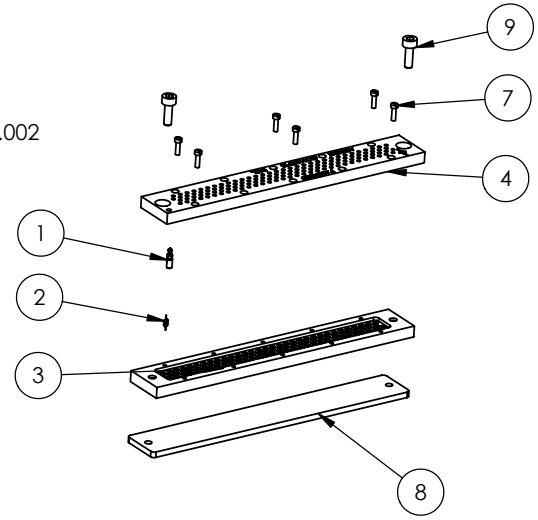

ITEM NO.	PART NUMBER	DESCRIPTION	embossed/QTY.
1	CE12LG02	1.27mm LGA CONTACT ELEMENT	128
2	RC12-06	1.27 PITCH RC	128
3	BPITC128LG1501	BOTTOM PLATE	1
4	TPITC128LG1501	TOP PLATE	1
5	AFITC128LG1501	ASSEMBLY FIXTURE	REF
6	ADITC128LG1501	ASSEMBLY DAM	REF
7	000120FHSC125	000-120 FILLISTER HEAD X .125"	6
8	BCITC128LG1501	BOTTOM COVER	1
9	M16SHCS05	M1.6 SOCKET CAP X 5mm	2

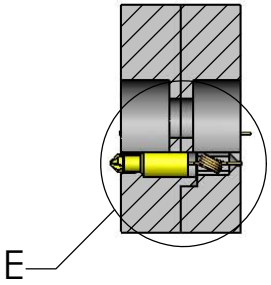

SECTION D-D
SCALE 5 : 1

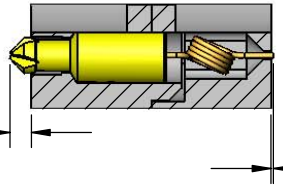

DETAIL E
SCALE 10 : 1

INCHES
UNLESS OTHERWISE SPECIFIED.
ALL DIMENSIONS ARE IN INCHES
TOLERANCES:
X.XX = ±.005
ANGLES: ± 3 X.XXX = ±.002
X.XXXX = ±.001

DRAWN BMS DATE 8-3-07
CHECKED
ENG APPR.

ARDENT CONCEPTS
4 MERRILL INDUSTRIAL DR, SUITE 102
HAMPTON, NH 03842
(603) 926-2517

CHANGE | NOTE | PROJECTION

SIZE B

TITLE: 128 NODE CONNECTOR ASSEMBLY

MATERIAL Tincona Vectra E130

INTERPRET GEOMETRIC TOLERANCING PER: ANSI Y14.5M 1982

DWG. NO. CAITC128LG1501

REV B

FINISH AS MOLDED

WWW.ARDENTCONCEPTS.COM SCALE: 2:1 WEIGHT: SHEET 1 OF 1