PROPRIETARY AND CONFIDENTIAL

THE INFORMATION CONTAINED IN THIS DRAWING IS THE SOLE PROPERTY OF ARDENT CONCEPTS, INC. ANY REPRODUCTION IN PART OR AS A WHOLE WITHOUT THE WRITTEN PERMISSION OF ARDENT CONCEPTS, INC. IS PROHIBITED.

REVISIONS

REV.	DESCRIPTION	DATE	APPROVED
A	ECN04-0191	8/17/04	ALB

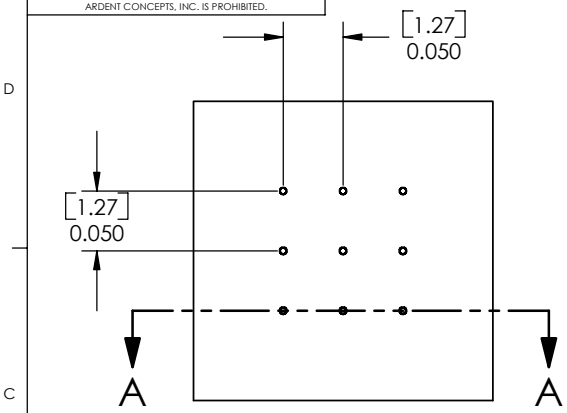

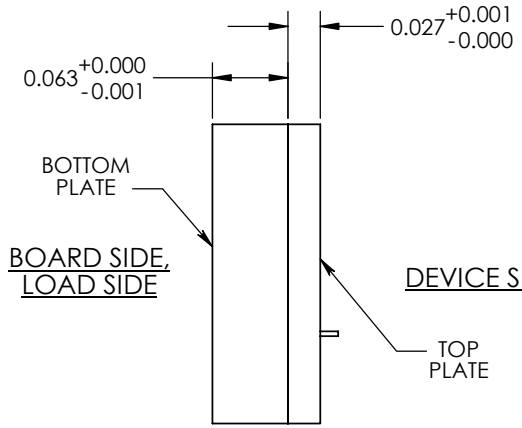

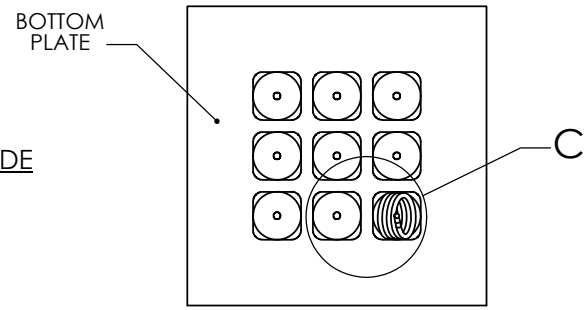

VIEW SHOWN WITHOUT TOP PLATE

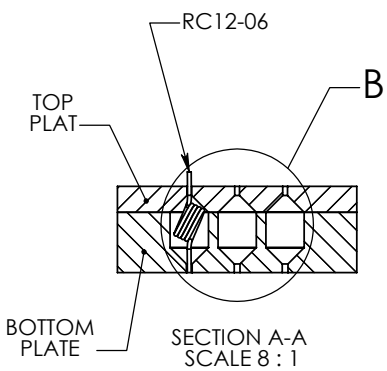

SECTION A-A
SCALE 8 : 1

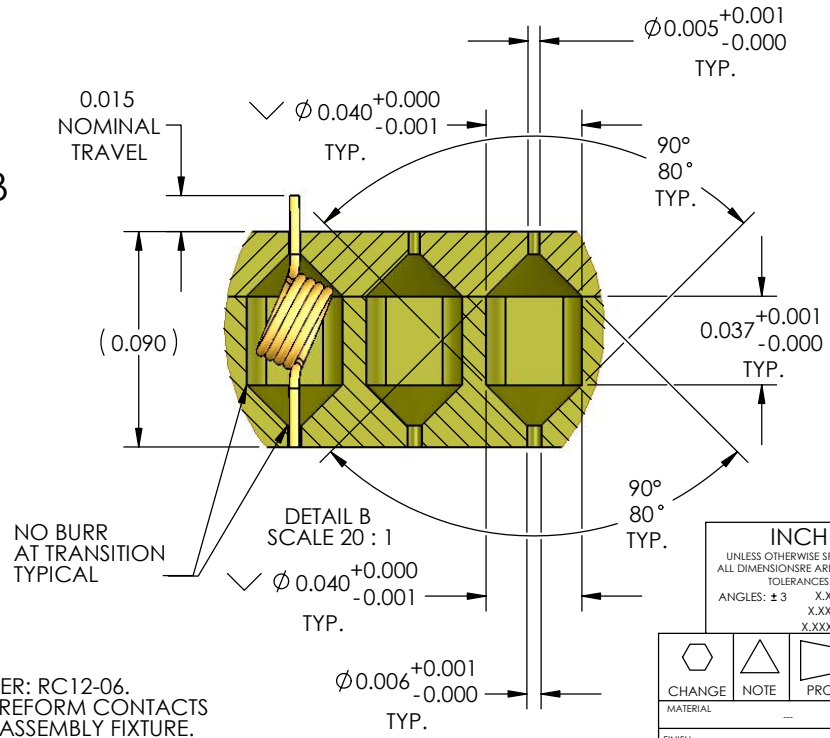

DETAIL B
SCALE 20 : 1

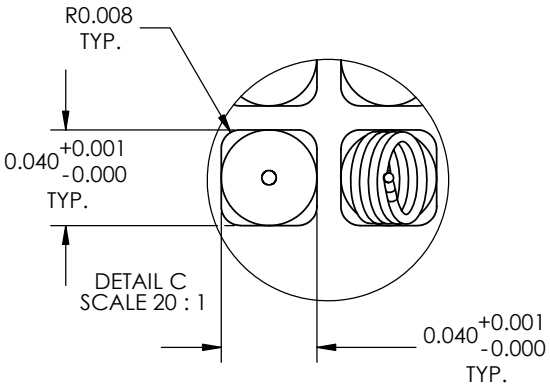

DETAIL C
SCALE 20 : 1

NOTES:

1. US AND FOREIGN PATENTS PENDING
2. CAVITY SPECIFICATION FOR PART NUMBER: RC12-06.
3. LOAD SIDE IS THE SIDE IN WHICH THE WIREFORM CONTACTS ARE INITIALLY LOADED USING VACUUM ASSEMBLY FIXTURE.

INCH
UNLESS OTHERWISE SPECIFIED.
ALL DIMENSIONSRE ARE IN INCHES
TOLERANCES:
ANGLES: ± 3 X.XX = ±.01 X.XXX = ±.001 X.XXXX = ±.0005

CHANGE | NOTE | PROJECTION

MATERIAL ---
FINISH ---

DRAWN ALB DATE 8/17/04
CHECKED
ENG APPR.

ARDENT CONCEPTS
4 HIGH STREET, SUITE 14
HAMPTON, NH 03842
(603) 926-2517

SIZE B
TITLE: 1.27mm REDUNDANT CONTACT CAVITY SPECIFICATION

INTERPRET GEOMETRIC TOLERANCING PER: ANSI Y14.5M 1982
DWG. NO. MPS04-0013
REV A

WWW.ARDENTCONCEPTS.COM SCALE: 10:1 WEIGHT: SHEET 1 OF 1