PROPRIETARY AND CONFIDENTIAL
THE INFORMATION CONTAINED IN THIS DRAWING IS THE SOLE PROPERTY OF ARDENT CONCEPTS, INC. ANY REPRODUCTION IN PART OR AS A WHOLE WITHOUT THE WRITTEN PERMISSION OF ARDENT CONCEPTS, INC. IS PROHIBITED.

REVISIONS

REV.	DESCRIPTION	DATE	APPROVED
A	RELEASED, ECN16-1926	08/23/16	SD

NOTES:

1. RECOMMENDED PLATING: .000030"-.000050" HARD GOLD, OR IMMERSION GOLD, OVER .000150" NICKEL.
SINCE THE UNIT IS COMPRESSION MOUNT, A NOBLE METAL PLATING SHOULD BE USED, NO TIN OR LEAD PLATING PERMISSABLE.

2. DIMENSIONS DEPENDENT ON PCB DIELECTRIC MATERIAL AND THICKNESS.
STATED DIMENSIONS ARE FOR MEGTRON 6 MATERIAL (HVLP), Dk 3.6, AT .00465" THICK WITH NO TOP SOLDERMASK.
FOR OTHER PCB DIELECTRICS AND THICKNESSES, CONSULT THE FACTORY.

3. MINIMUM COPPER THICKNESS FOR ALL LAYERS IS 1/2 OUNCE.

4. THESE DIMENSIONS VARY WITH PCB MATERIAL, DIELECTRIC CONSTANT AND THICKNESS. THE CIRCIUT MUST BE DESIGNED CAREFULLY IN ORDER TO MINIMIZE COUPLING TO SURROUNDING OR UNDERLYING LAYERS. CONSULT WITH FACTORY FOR HIGH FREQUENCY SIMULATION TO DETERMINE THESE DIAMETERS BASED ON FINAL PCB STACK-UP INFORMATION.

5. SIGNAL TRACES OUTSIDE THE CONNECTOR AREA SHOULD BE 50+/-2 OHMS IMPEDANCE.

6. BOARD STIFFENER RECOMMENDED FOR PCBs LESS THAN .063" (1.60mm) THICK. OPTIONALLY ON THICKER PCBs, AN M2 PEMNUT MAY BE USED. QUICK LATCH CAN BE USED FOR BOARDS .063" (1.60mm) OR THICKER.

7. ALL VIAS MUST BE 10 MILS IN DIAMETER, VIA IN PAD (VIP), NON-CONDUCTIVE FILL, CAPPED, PLANARIZED FLAT, WITH PLATING.

DRAWN BY S. DIAZ	DATE 07/12/16
CHECKED BY J. DIDONNA	DATE 08/23/16
APPROVED BY G. VINTHER	DATE --/--/--
APPROVED BY D. EMMA	DATE --/--/--

CHANGE | NOTE | PROJECTION

METRIC
UNLESS OTHERWISE SPECIFIED.
TOLERANCES:
ANGLES: ± 3 X.X = ±.1 X.XX = ±.05 X.XXX = ±.025

ARDENT CONCEPTS
130 LEDGE ROAD, UNIT 2
SEABROOK, NH 03874
(603) 474-1760

MATERIAL: SEE NOTE
FINISH: SEE NOTE
SIZE: C
TITLE: STANDARD 12 CHANNEL FOOTPRINT SPECIFICATION
INTERPRET GEOMETRIC TOLERANCING PER: ANSI Y14.5M 1982
DWG. NO. FP12X1-2.54
REV A
WWW.ARDENTCONCEPTS.COM
SCALE: 3:1
WEIGHT:
SHEET 1 OF 5

PROPRIETARY AND CONFIDENTIAL

THE INFORMATION CONTAINED IN THIS DRAWING IS THE SOLE PROPERTY OF ARDENT CONCEPTS, INC. ANY REPRODUCTION IN PART OR AS A WHOLE WITHOUT THE WRITTEN PERMISSION OF ARDENT CONCEPTS, INC. IS PROHIBITED.

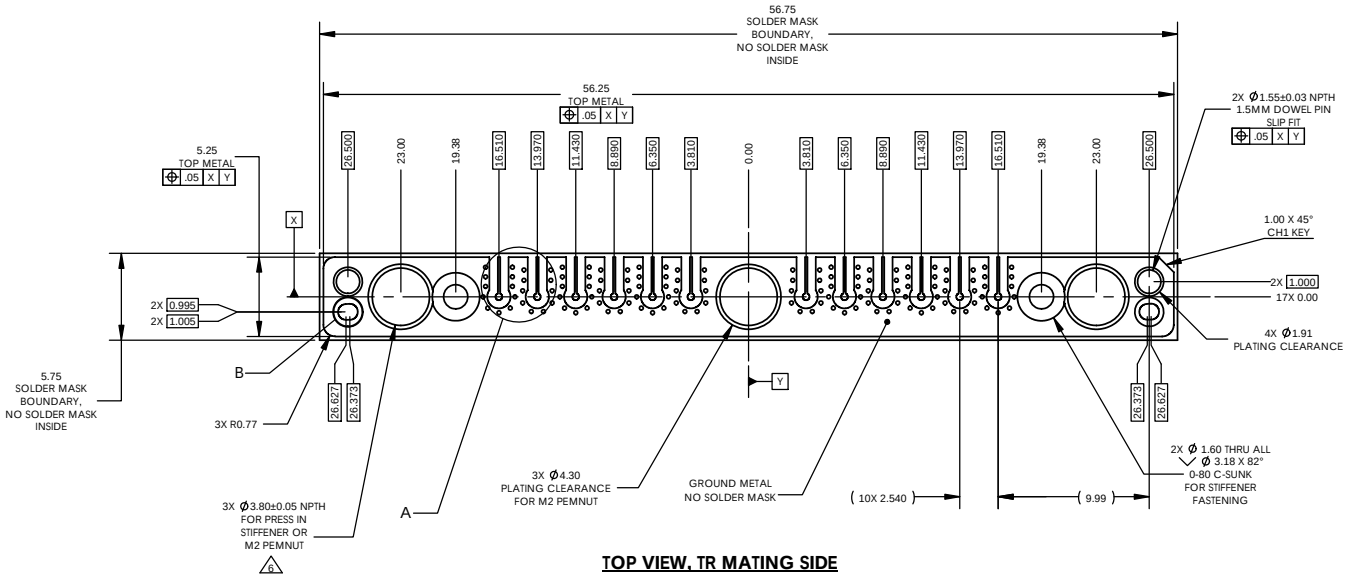

TOP VIEW, TR MATING SIDE

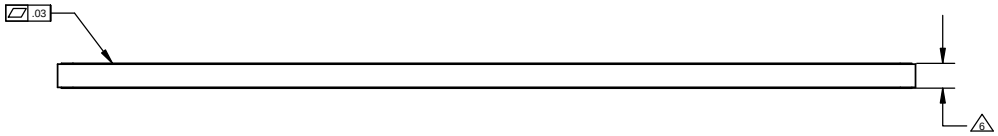

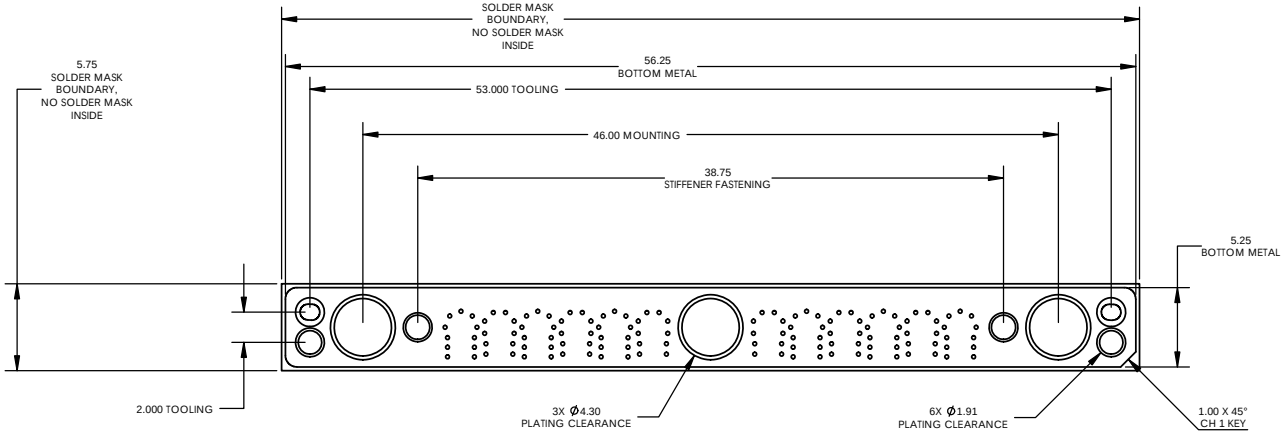

BOTTOM VIEW, STIFFENER MATING SIDE

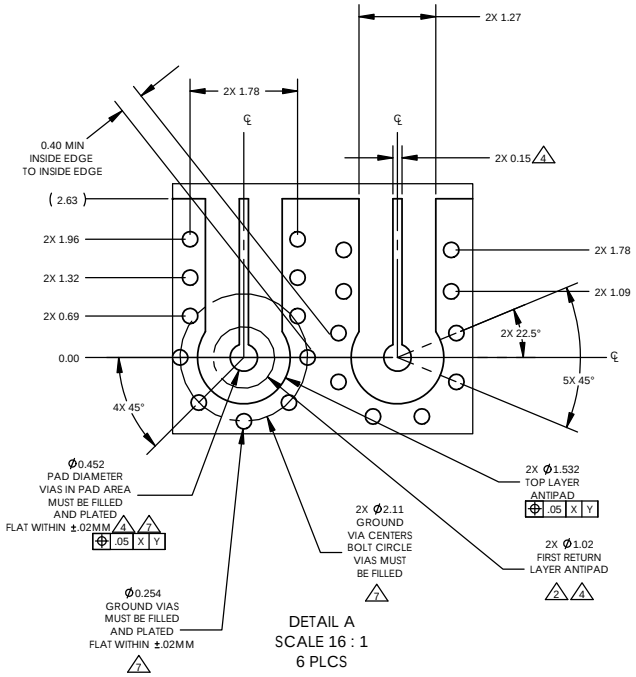

DETAIL A
SCALE 16 : 1
6 PLCS

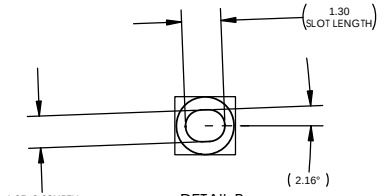

DETAIL B
SCALE 8 : 1
2 PLCS

ARDENT CONCEPTS 130 LEDGE ROAD, UNIT 2 SEABROOK, NH 03874 (603) 474-1760	SIZE: C	TITLE: MICROSTRIP, STRAIGHT MOUNT
	DWG. NO. FP12X1-2.54	REV A
	WWW.ARDENTCONCEPTS.COM	SCALE: 3:1 / SHEET 2 OF 5

PROPRIETARY AND CONFIDENTIAL

THE INFORMATION CONTAINED IN THIS DRAWING IS THE SOLE PROPERTY OF ARDENT CONCEPTS, INC. ANY REPRODUCTION IN PART OR AS A WHOLE WITHOUT THE WRITTEN PERMISSION OF ARDENT CONCEPTS, INC. IS PROHIBITED.

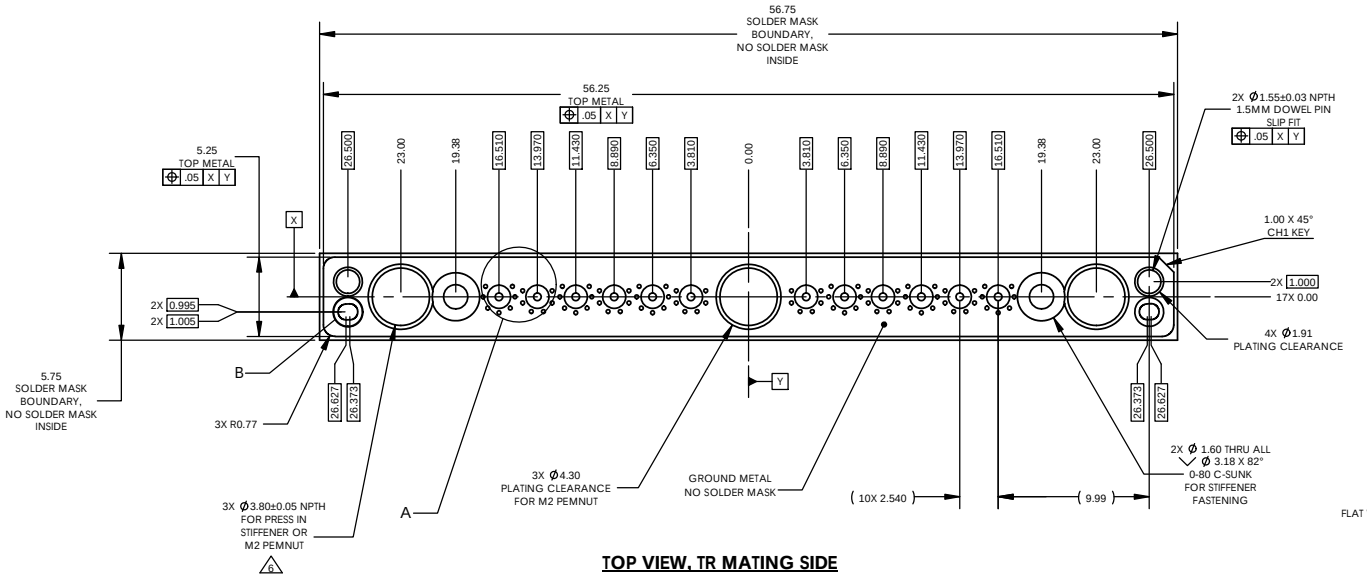

TOP VIEW, TR MATING SIDE

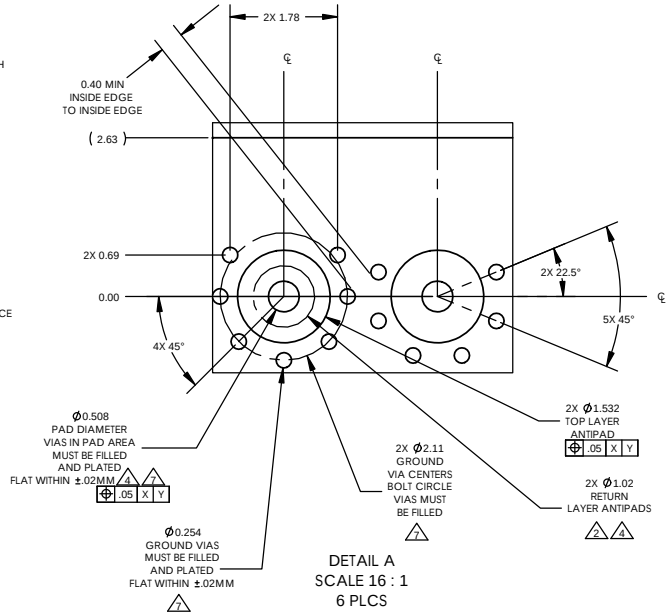

DETAIL A
SCALE 16 : 1
6 PLCS

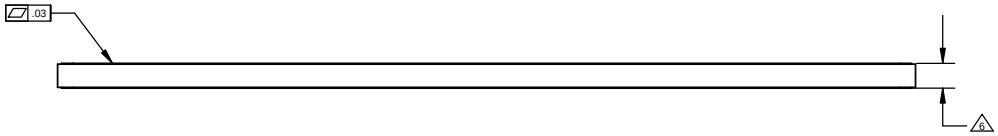

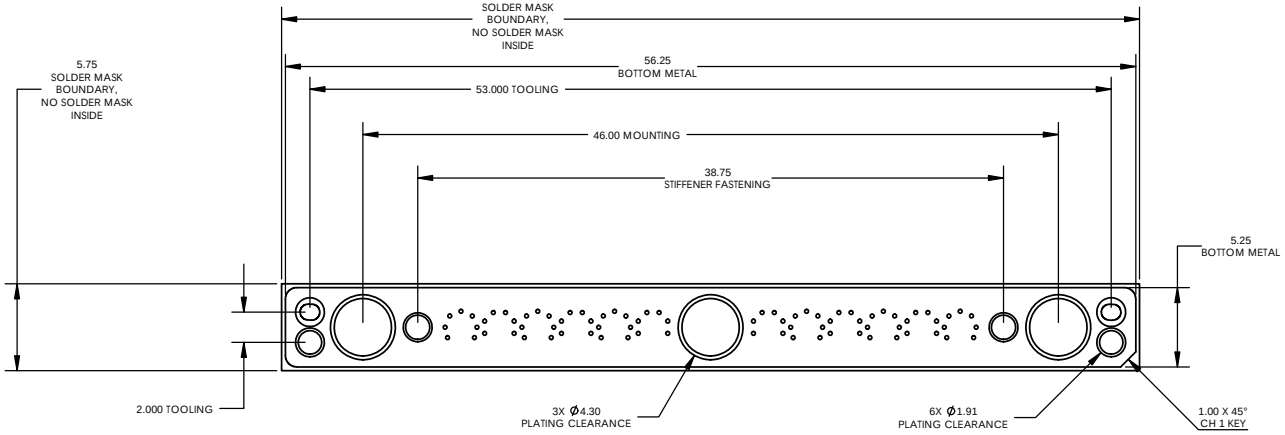

BOTTOM VIEW, STIFFENER MATING SIDE

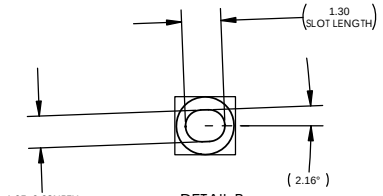

DETAIL B
SCALE 8 : 1
2 PLCS

ARDENT CONCEPTS
130 LEDGE ROAD, UNIT 2
SEABROOK, NH 03874
(603) 474-1760

SIZE	TITLE:
C	STRIPLINE, STRAIGHT MOUNT
DWG. NO. FP12X1-2.54	REV A
WWW.ARDENTCONCEPTS.COM	SCALE: 3:1 / SHEET 3 OF 5

PROPRIETARY AND CONFIDENTIAL

THE INFORMATION CONTAINED IN THIS DRAWING IS THE SOLE PROPERTY OF ARDENT CONCEPTS, INC. ANY REPRODUCTION IN PART OR AS A WHOLE WITHOUT THE WRITTEN PERMISSION OF ARDENT CONCEPTS, INC. IS PROHIBITED.

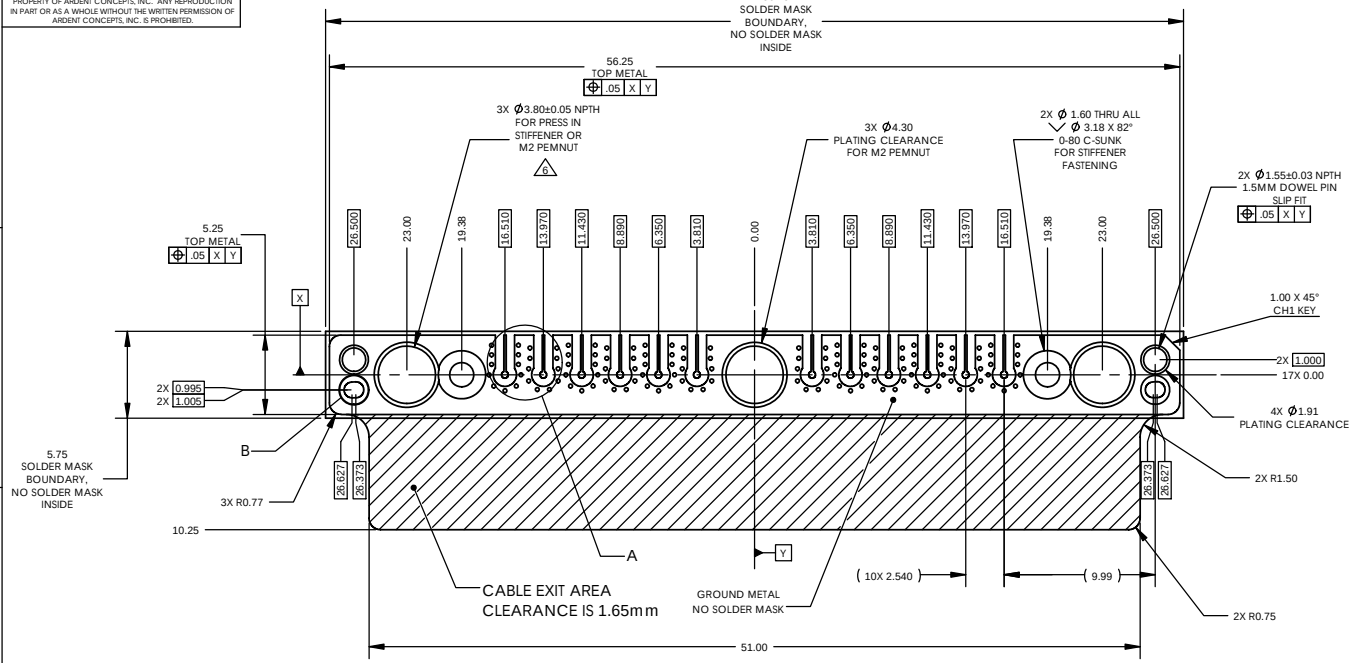

TOP VIEW, TR MATING SIDE

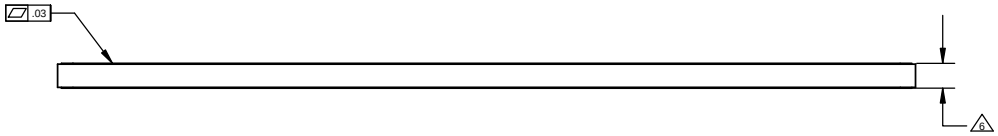

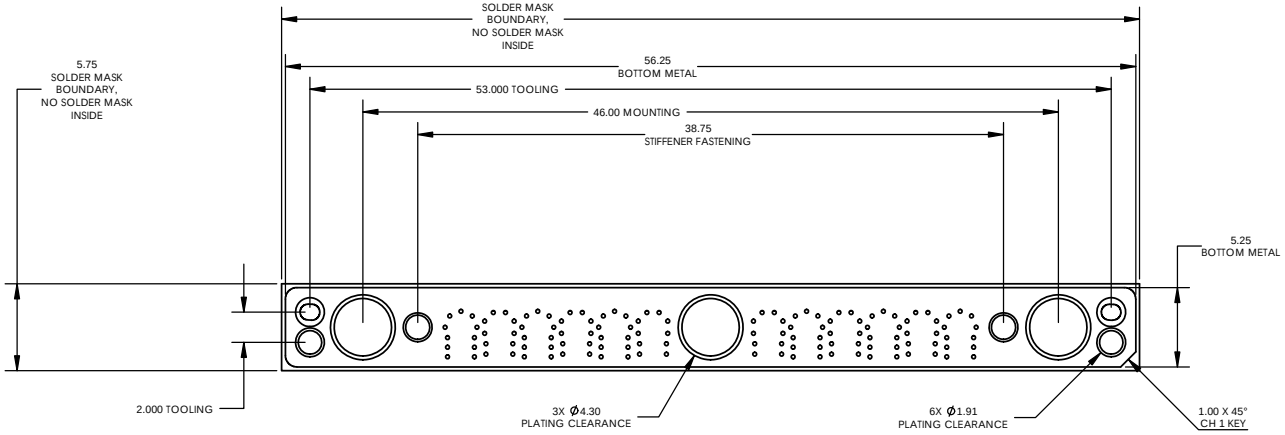

BOTTOM VIEW, STIFFENER MATING SIDE

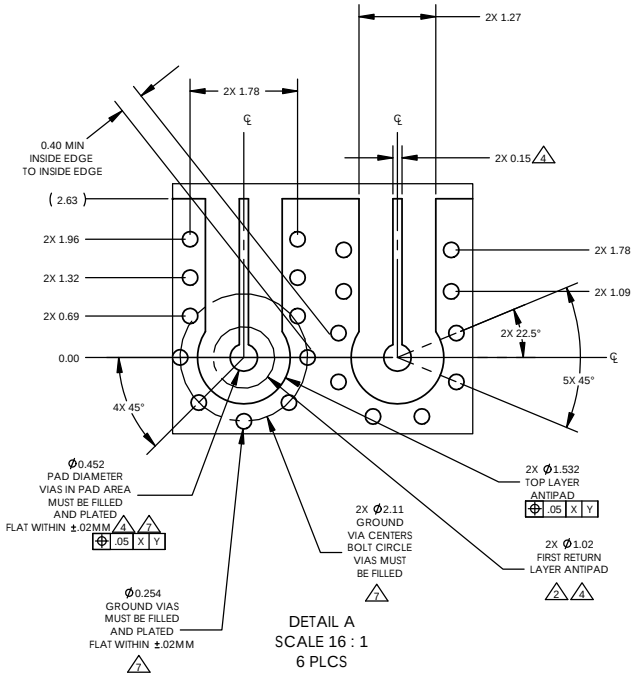

DETAIL A
SCALE 16 : 1
6 PLCS

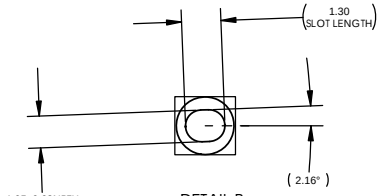

DETAIL B
SCALE 8 : 1
2 PLCS

ARDENT CONCEPTS 130 LEDGE ROAD, UNIT 2 SEABROOK, NH 03874 (603) 474-1760	SIZE: C	TITLE: MICROSTRIP, RIGHT ANGLE
	DWG. NO. FP12X1-2.54	REV A
	WWW.ARDENTCONCEPTS.COM	SCALE: 3:1 / SHEET 4 OF 5

PROPRIETARY AND CONFIDENTIAL
THE INFORMATION CONTAINED IN THIS DRAWING IS THE SOLE PROPERTY OF ARDENT CONCEPTS, INC. ANY REPRODUCTION IN PART OR AS A WHOLE WITHOUT THE WRITTEN PERMISSION OF ARDENT CONCEPTS, INC. IS PROHIBITED.

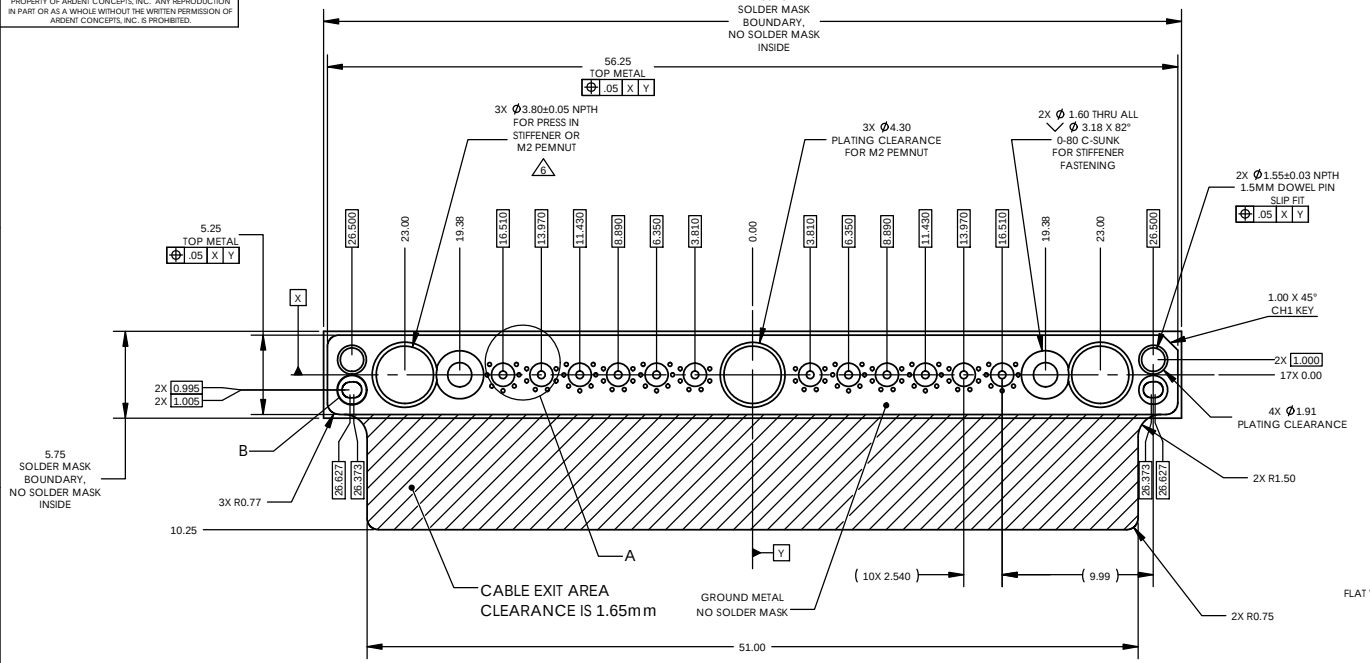

TOP VIEW, TR MATING SIDE

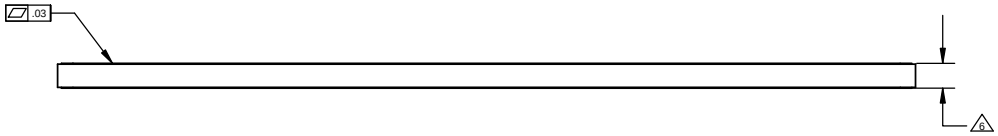

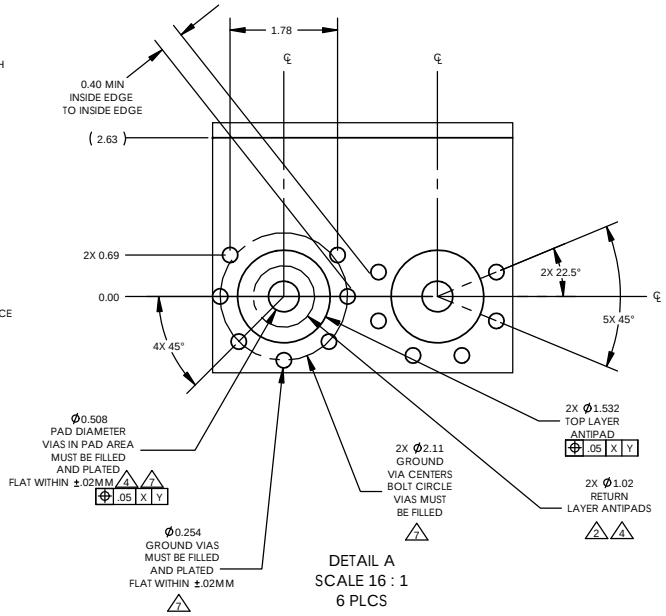

DETAIL A
SCALE 16 : 1
6 PLCS

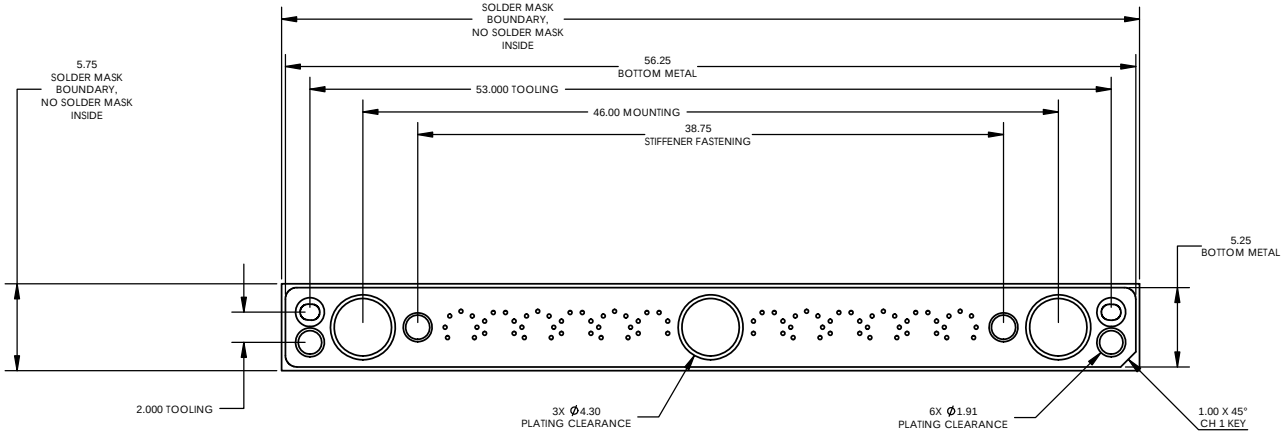

BOTTOM VIEW, STIFFENER MATING SIDE

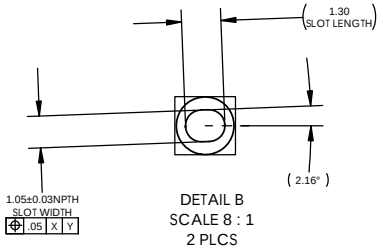

DETAIL B
SCALE 8 : 1
2 PLCS

ARDENT CONCEPTS
130 LEDGE ROAD, UNIT 2
SEABROOK, NH 03874
(603) 474-1760

SIZE	TITLE:
C	STRIPLINE, RIGHT ANGLE
DWG. NO. FP12X1-2.54	REV A
WWW.ARDENTCONCEPTS.COM	SCALE: 3:1 / SHEET 5 OF 5