PROPRIETARY AND CONFIDENTIAL

THE INFORMATION CONTAINED IN THIS DRAWING IS THE SOLE PROPERTY OF ARDENT CONCEPTS, INC. ANY REPRODUCTION IN PART OR AS A WHOLE WITHOUT THE WRITTEN PERMISSION OF ARDENT CONCEPTS, INC. IS PROHIBITED.

REVISIONS

REV.	DESCRIPTION	DATE	APPROVED
A	RELEASED, ECN10-0664	11/16/10	SD

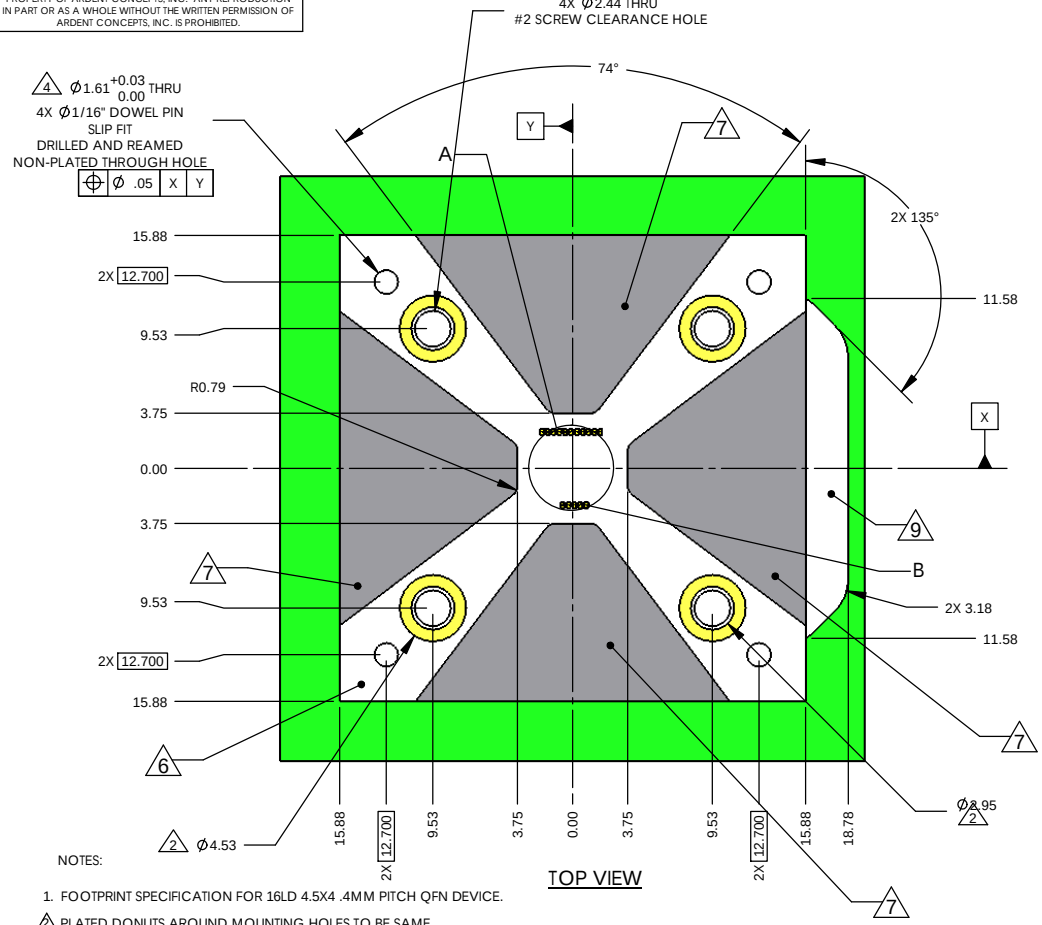

TOP VIEW

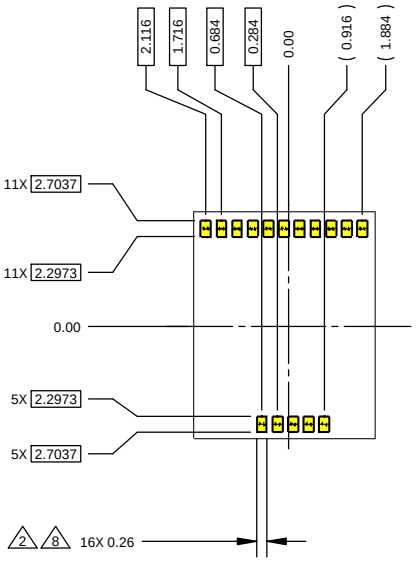

DETAIL A
SCALE 8 : 1

NOTES:

1. FOOTPRINT SPECIFICATION FOR 16LD 4.5X4 .4MM PITCH QFN DEVICE.
2. PLATED DONUTS AROUND MOUNTING HOLES TO BE SAME HEIGHT AS PADS ON PERFORMANCE BOARD
3. PAD TO PAD TO MOUNTING DONUT COPLANARITY TO BE WITHIN .001".
4. TOOLING HOLES TO BE NON-PLATED THRU HOLES DRILLED AND REAMED TO SIZE
5. RECOMMENDED PLATING FOR PADS .000200" NICKEL UNDER .000050" GOLD MINIMUM.
6. THERE SHOULD BE NO SOLDERMASK UNDER THE SOCKET AREA.
7. CLEARANCE, 1.78mm (.070").
8. NO VIAS IN PADS.
9. CLEARANCE, 12.4MM (.490").

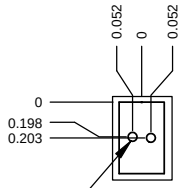

BOARD-SIDE
CONTACT POINT
2 PLCS

DETAIL B
SCALE 36 : 1
16 PLCS

METRIC
UNLESS OTHERWISE SPECIFIED.

TOLERANCES:
ANGLES: ± 3 X.X = ±.10
X.XX = ±.05
X.XXX = ±.02

CHANGE | NOTE | PROJECTION

MATERIAL ---

FINISH ---

DRAWN SD DATE 09/04/09
CHECKED
ENG APPR.

ARDENT CONCEPTS
4 MERRILL INDUSTRIAL DR, SUITE 102
HAMPTON, NH 03842
(603) 926-2517

SIZE B

TITLE: FOOTPRINT SPECIFICATION

INTERPRET GEOMETRIC TOLERANCING PER: ANSI Y14.5M 1982

DWG. NO. FPCOB16SN0402

REV A

WWW.ARDENTCONCEPTS.COM | SCALE: 3:1 | WEIGHT: | SHEET 1 OF 1